M8 4.4 Surface Area of a Right Triangular Prism

Name _____

Blk _____

Review

Prism : polyhedron w/ 2 bases
: rectangular side faces

Pyramid : polyhedron w/ 1 base
: triangular side faces

Surface Area : the total area of all surfaces

Volume : the total space occupied by an object

Nets

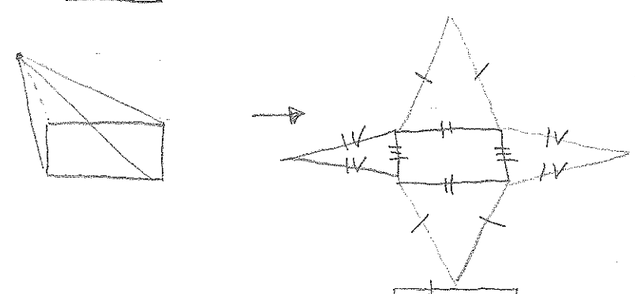

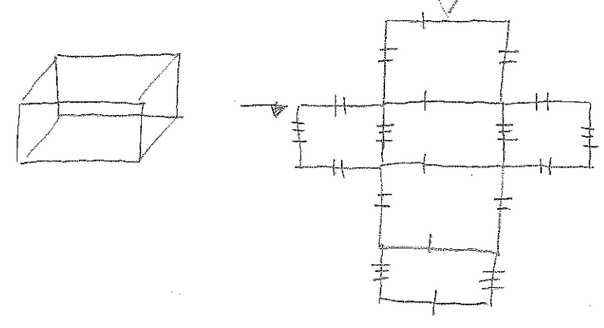

New

HW: 4, 6, 7 (textbook)
: 7.6 (workbook)

Ex 1 Area of a triangle $= \frac{1}{2} \cdot b \cdot h$ or $\frac{b \cdot h}{2}$

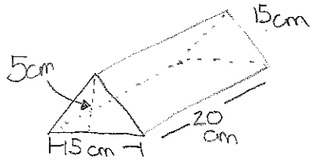

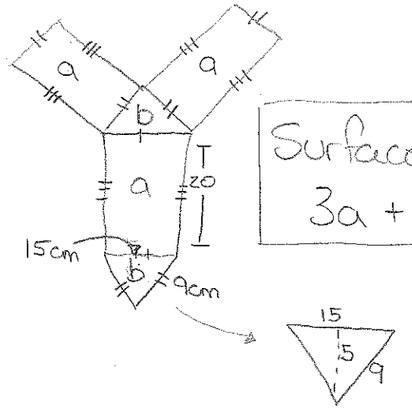

Surface Area = $3a + 2b$

Area

a	$15 \cdot 20 = 300\ cm^2$
b	$\frac{5 \cdot 15}{2} = \frac{75}{2} = 37.5\ cm^2$
3a	$3 \cdot 300 = 900\ cm^2$
+ 2b	$2 \cdot 37.5 = 75\ cm^2$ +
	$\boxed{975\ cm^2}$

Ex 2

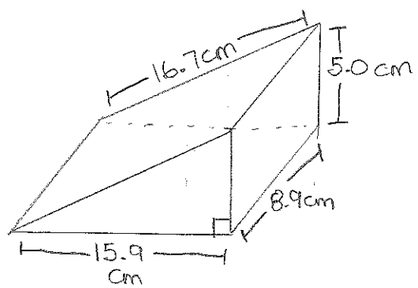

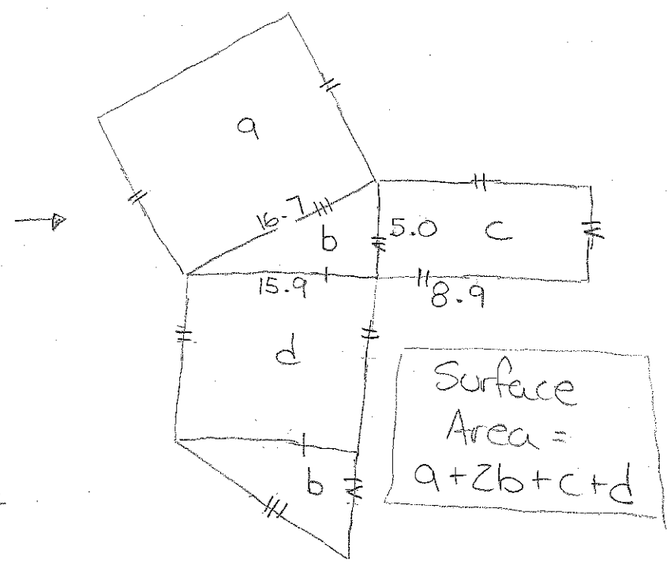

Surface Area = $a + 2b + c + d$

Area

a	$16.7 \times 8.9 = 148.63\ cm^2$
b	$\frac{5 \times 15.9}{2} = 39.75\ cm^2$
c	$5 \times 8.9 = 44.5\ cm^2$
d	$15.9 \times 8.9 = 140.51\ cm^2$
2b	$39.75 \times 2 = 79.50\ cm^2$
a+2b+c+d	$148.63 + 79.50 + 44.5 + 140.81$
	$= 413.44\ cm^2$